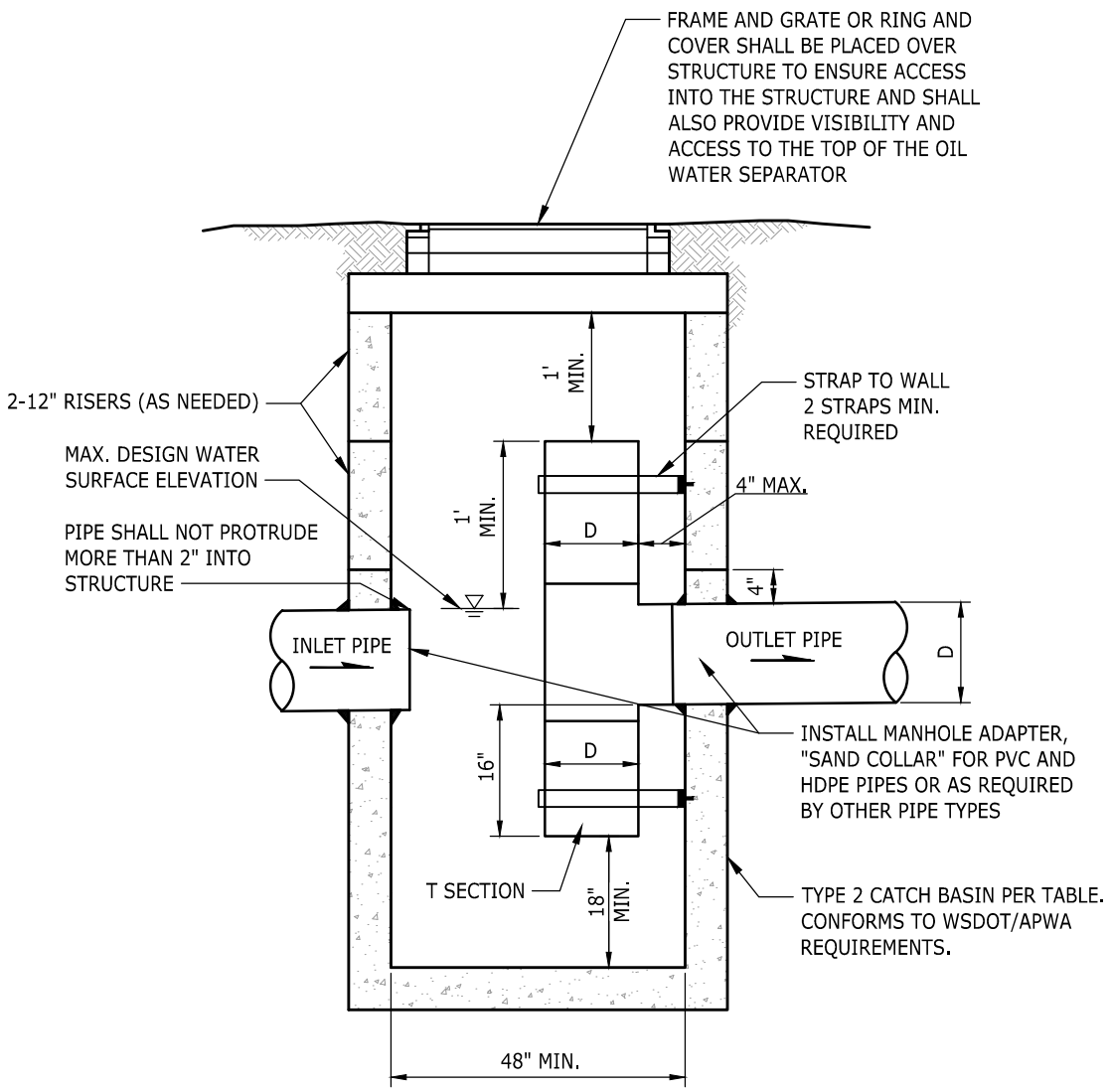

NOTES:

1. MIN. OUTLET PIPE DIAMETER IS 12".
2. ALL METAL PARTS AND SURFACES MUST BE MADE OF CORROSION RESISTANT MATERIAL OR GALVANIZED.
3. DIMENSION "D" IS NOMINAL DIAMETER OF OUTLET PIPE.

OUTLET PIPE DIA.	STRUCTURE TYPE
≤ 12"	TYPE 2 CB-48"
≤ 18"	TYPE 2 CB-54"

NOTE: THIS PLAN IS NOT A LEGAL ENGINEERING DOCUMENT BUT AN ELECTRONIC DUPLICATE. THE ORIGINAL, SIGNED BY THE ENGINEER AND APPROVED FOR PUBLICATION IS KEPT ON FILE AT THE CITY OF KENT. A COPY MAY BE OBTAINED UPON REQUEST.

KENT WASHINGTON

CITY OF KENT
ENGINEERING DEPARTMENT

CATCH BASIN WITH OIL/WATER SEPARATOR

DESIGNED COK	SCALE NONE	STANDARD PLAN	
DRAWN COK			
CHECKED COK	DATE 9/2020	5–17	
APPROVED ENGINEER			