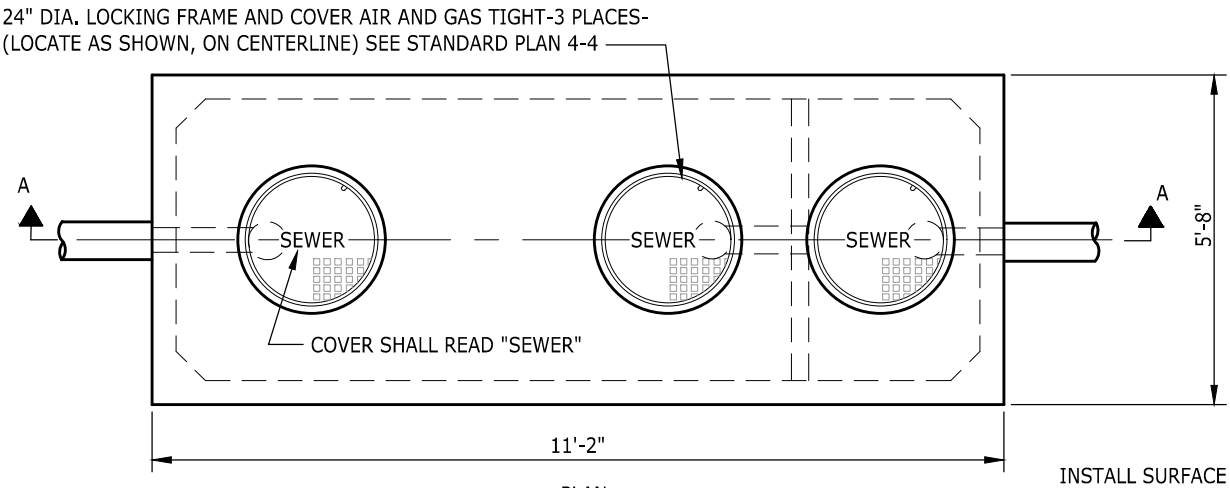

PLAN

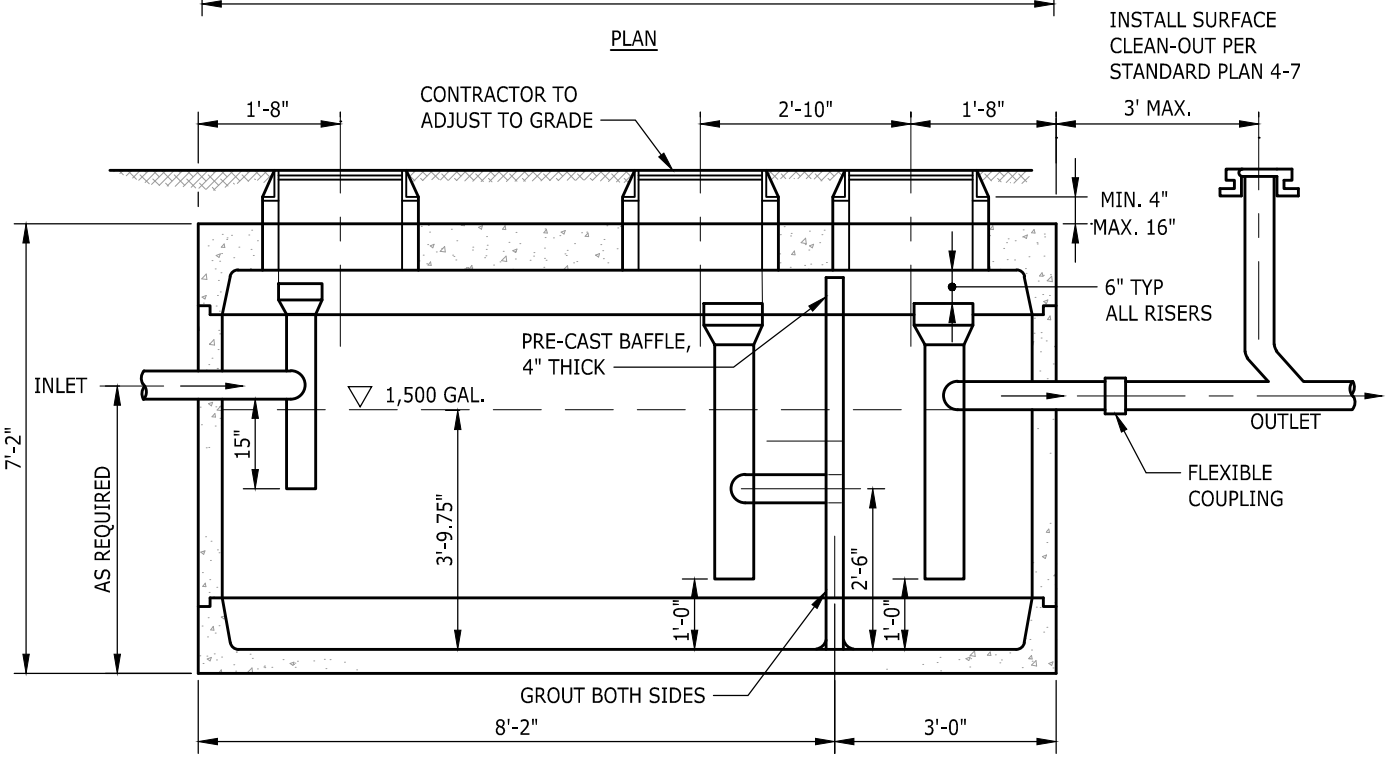

SECTION A-A

NOTES:

1. LOCATE STRUCTURE ADJACENT TO DRIVE AND FOR ACCESS BY MAINTENANCE VEHICLE.
2. FILL WITH CLEAN WATER PRIOR TO START UP OF SYSTEM.
3. INTERCEPTOR TO BE MAINTAINED BY OWNER AND ANNUAL MAINTENANCE REPORT WILL BE REQUIRED.
4. UTILITY VAULT CO., INC. MODEL NO. 5106 GA OR EQUAL.
5. CONNECTIONS TO CONCRETE WALLS WITH PVC PIPE REQUIRES KOR-N-SEAL CONNECTOR OR A.C. X PVC BAND ADAPTER OR APPROVED EQUAL. SEAL ALL PIPE CONNECTIONS WITH NON-SHRINK GROUT.
6. 6" PVC SHALL BE USED THROUGHOUT. PIPE MATERIAL SHALL BE PER STANDARDS. TOP OF "TEES" TO BE KEPT OPEN.
7. GRAY WATER ONLY. BLACK WATER SHALL BE CARRIED BY SEPARATE SIDE SEWER.
8. ANY CHANGES REQUIRE PRIOR APPROVAL BY THE ENGINEER

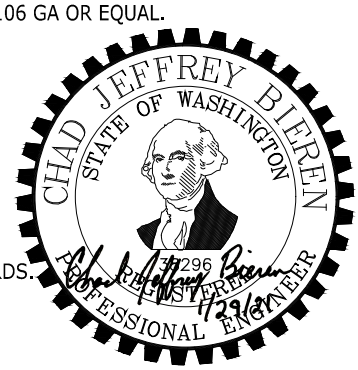

NOTE: THIS PLAN IS NOT A LEGAL ENGINEERING DOCUMENT BUT AN ELECTRONIC DUPLICATE. THE ORIGINAL, SIGNED BY THE ENGINEER AND APPROVED FOR PUBLICATION IS KEPT ON FILE AT THE CITY OF KENT. A COPY MAY BE OBTAINED UPON REQUEST.

KENT WASHINGTON

CITY OF KENT
ENGINEERING DEPARTMENT

1,500 GALLON GREASE INTERCEPTOR

DESIGNED COK	SCALE NONE	STANDARD PLAN	
DRAWN COK			
CHECKED COK	DATE 12/2019	4–11	
APPROVED	ENGINEER		